Contents

1 Subject of specification 2
2 Scope of validity 2
2.1 Deviations 2
2.2 Exclusions 2
3 Hierarchy of documents 2
4 Definitions and designations 2
4.1 Definitions 2
4.2 Designations 3
5 Description 4
5.1 Servers' room requirements 4
5.2 Structure of system 4
5.3 Symmetrical cabling 5
5.4 Fibre optic cabling 6
5.5 Installation of cabling 7
5.6 Acceptance of cabling 8
5.7 Documentation 8
6 Relevant documents 9
7 Standards and regulations 9
7.1 Building regulations 9
7.2 Polish PN-EN Standards 10
7.3 European EN Standards 12
7.4 IEC standards 12
7.5 Other standards 13
8 Enclosures 13
9 Record of changes 13

This document is the property of Grupa LOTOS SA.. Coping and giving it to other are forbidden without express written authority by Grupa LOTOS SA

1 Subject of specification

This specification used in conjunction with other technical specifications of LOTOS Group S.A., establishes minimal requirements regarding designing and execution of telecommunications cabling systems.

2 Scope of validity

This specification shall be used when preparing both quotations and Purchase Orders concerning planned LOTOS Group S.A. new investments and modernizations.

It shall also be a base for preparation of other detailed specifications and quotations relevant for package units or other equipment deliveries.

2.1 Deviations

Any deviation from this specification and the relevant specifications, standards and related documents including proposals, which the bidder claims to be economically and / or technically superior solutions, must be submitted in writing for review and approval by Grupa LOTOS SA. Non-approved exceptions are not acceptable by Grupa Lotos S.A.

The supplier must report in writing any ambiguity in this or any other specifications of Grupa LOTOS SA or non-compliance with the referred documents / standards and obtain a written explanation from Grupa Lotos SA.

2.2 Exclusions

This specification does not include:

- Requirements regarding individual applications of generic cabling
- Active devices co-operating with generic cabling system
- Requirements regarding installation routes and their structural elements (trays, ducts, etc.)

3 Hierarchy of documents

In case of conflicts existing between this specification and other documents, the following order of precedence shall govern:

- The current Polish legislation
- Terms of purchase order / contract and other requirements agreed in writing with GLSA
- Data Sheets approved by GLSA
- This specification
- Other Specifications
- Drawings and other documents
- Standards

4 Definitions and designations

4.1 Definitions

GLSA – Grupa Lotos S. A.

Telecommunications socket – a device, permanently installed, where horizontal cable terminal is located

Patchcord – a cable connecting telecommunications socket with terminal unit

Horizontal cable – a cable connecting floor distribution point with sockets.

Hardware cable – a cable connecting distribution point with active equipment

Backbone cable – a cable connecting building distribution point with floor distribution point, or connecting floor distribution points

Multi-pair cable – symmetrical cable containing more than four pairs

Transmission cable – channel connecting two equipment specific for given application. Hardware cables and patchcords are included among channel elements.

Component – element (hardware) of generic cabling

Transmission link – a channel connecting two measuring interfaces of cabling

Generic cabling – a system of telecommunications cabling adapted to handling wide family of applications, mainly related to data communications

Work area – area of building used for operation of terminal units.

Distributing point **–** determination of functions performed by set of components used for coupling of cables.

Patch panel – equipment in distribution point serving for coupling of cables

4.2 Designations

ATM	asynchronous transmission mode
EMC	electromagnetic compatibility
FEXT	reduction of far-end crosstalk
NEXT	reduction of near-end crosstalk
PBX	private branch exchange
STP	screened twisted pair cable
U/UTP	unscreened twisted pair cable
F/UTP	foil screened cable
U/FTP	pair screened foil cable
SF/UTP	foil and tinned screening cable
S/FTP	cable with foil screened pair with overall tinned screen
SF/FTP	foil screened pair cable with foil and tinned overall screen
HVAC	Heating, Ventilation and Air-Conditioning

One shall use designations of GLSA objects according to 6120 Standard, given in chapter 5.

5 Description

5.1 Servers' room requirements

Servers' rooms shall be equipped with HVAC and access control systems.

5.2 Structure of system

5.2.1 Hierarchy

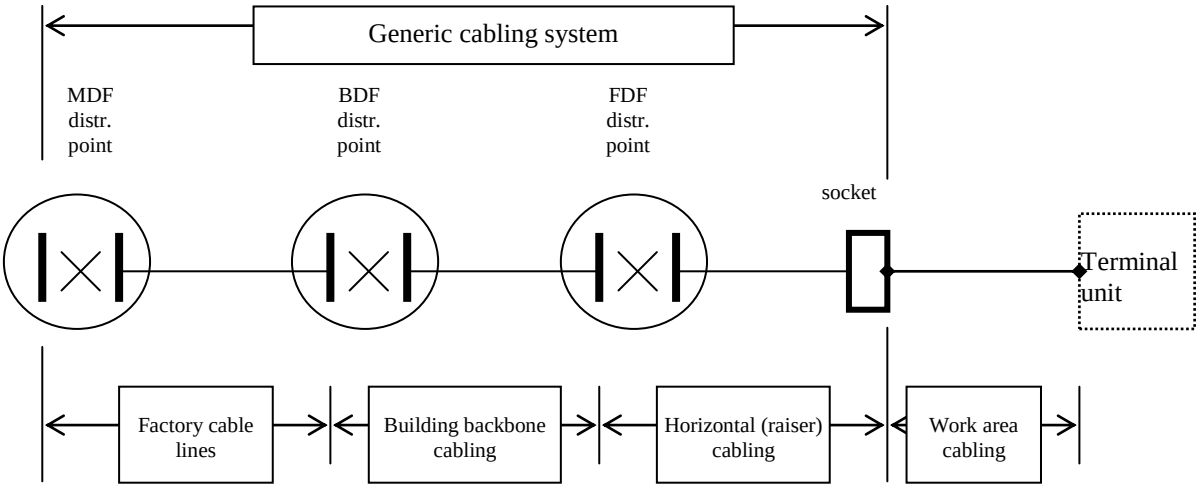

This specification determines transmission requirements for whole generic cabling system. Sub-systems interconnections in distribution points can be of active or passive type. Hardware cables are not considered as elements of generic cabling system.

5.2.2 Designing

Horizontal floor cabling shall be designed in such a way, that most wide existing and future applications (in 10 year perspective) can be served by it. Backbone cabling shall be designed in limits of existing needs – easy access to this cabling is simultaneously assumed. Installation routes, as well as destination and types of cables will result from design. Design and cost calculation documentation of installation shall be each time elaborated, according to regulations of p. 6.1.

Work areas will be determined by designer in agreement with GLSA One [2-module] socket is recommended for every 10 m^2 of work area.

The assumed equipment of RJ45 sockets must be consistent with 230 V AC computer power supply sockets assumed in the electrical discipline design. Moreover RJ45 and 230 V AC sockets shall be located next to each other as a one logical point.

Basic logical point consists of 3xRJ45 sockets cat. 6.

RJ45 sockets shall be labeled as: 1 / 01, 1 / 02 ... 1 / 24 and further as2 / 1, 2 / 2 ... 2 / 24 etc. The first digit represents the RJ45 panel's number of the MDF cabinet.

5.2.3 Performance and layout of channels

The minimum efficiency of generic cabling channels are given in chapters 4.2.1 and 4.3.1. Equivalent efficiency of channel on longer distances can be achieved with use of better efficiency components, coupling, for example, symmetric cabling channel with fiber optic cabling channel by means of converter. On GLSA site total length of channel = 2,000 m shall not be exceeded.

5.3 Symmetrical cabling

5.3.1 Parameters of channels

Class	Bandwidth to	Min. reflection losses	Maximum attenuation	NEXT reduction	Reduction of FEXT to length	Loop resistance
A	100 kHz	-	16.0 dB	27.0 dB	-	560 Ω
B	1 MHz	-	5.8 dB	25.0 dB	-	170 Ω
C	16 MHz	15.0 dB	14.4 dB	19.4 dB	-	40 Ω
D	100 MHz	10.0 dB	24.0 dB	30.1 dB	17.4 dB	25 Ω
E	250 MHz	8.0 dB	35.9 dB	33.1 dB	15.3 dB	25 Ω
E_A	500MHz	6,0 dB	49,3 dB	27,9 dB	9,3 dB	25 Ω
F	600 MHz	8.0 dB	54.6 dB	51.2 dB	31.3 dB	25 Ω
F_A	1000MHz	6,0 dB	67,6 dB	47,9 dB	27,4 dB	25 Ω

5.3.2 Cabling of objects

In office buildings new horizontal [riser] cabling shall ensure at least Class D performance. In buildings of industrial nature, cabling performance shall be adapted according to needs. Length of links shall be calculated on the grounds of PN-EN 50173 standard.

In each case cabling must enable:

- connection of PBX factory exchange phone
- connection of public ISDN network NT1 termination for primary access

Detailed agreement with GLSA operating services is required each time.

5.3.3 Types of cables

Screened or non screened cables can be used. Category of cables and components shall be adapted to class of channel. Cable types given in Specification 3720 are recommended. Electric and mechanic requirements for cables result from adequate standards.

Cable category	Cables with single-wire cores	Cables with multi-wire cores
5	PN-EN 50288-2-1 PN-EN 50288-3-1	PN-EN 50288-2-2 PN-EN 50288-3-2
6	PN-EN 50288-5-1 PN-EN 50288-6-1	PN-EN 50288-5-2 PN-EN 50288-6-2
6_A	PN-EN 50288-10-1 PN-EN 50288-11-1	PN-EN 50288-10-2 PN-EN 50288-11-2
7	EN 50288-4-1	EN 50288-4-2
7_A	PN-EN 50288-9-1	PN-EN 50288-9-2

Cables and leads of lower categories, most often 120 Ω impedance, shall meet requirements of Polish Standards. Telecommunications wires – section of PN-T-90200 standards, telecommunication cables – section of PN-T-90320 standards.

5.3.4 Connecting equipment

Connecting [patching] equipment shall be installed in distribution points. The equipment shall be such installed, that easy identification, access for control purposes and protection against damages is ensured. Proper performance of equipment shall be maintained in temperature range from –10ºC up to +60ºC. It is recommended to use IDC technology equipment (that uses notching of insulation). Links being made between plugs and sockets of different categories shall fulfil all requirements related to component of lower class. Recommended types – refer to Specification 3720.

5.3.5 Connecting sockets

Assignment of pairs and terminals is showed on figure below.

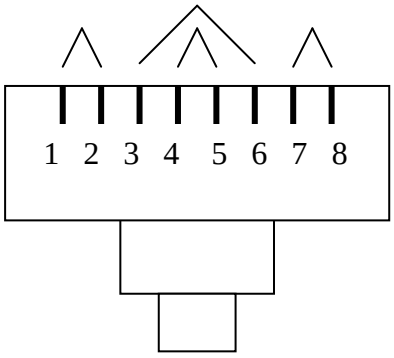

Socket of 5, 6 and 6A category

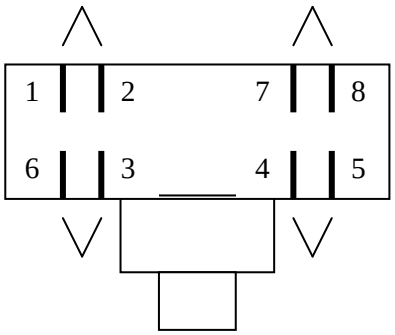

Socket of 7 and 7A category

In RJ45 modules of 6 category, cable pair made in form of wire shall be terminated according to colour code compliant to ISO/IEC 11801, with use of T568B cable form scheme. For industrial uses one shall consider employment of special type RJ45 socket. RJ-12 type sockets and sockets of type GTN or GTP shall be applied for lower cabling classes.

5.4 Fibre optic cabling

5.4.1 Parameters of channels

Class	Distance	Maximum channel attenuation [dB]			
		850 nm	1300 nm	1310 nm	1550 nm
OF-300	300 m	2,55	1,95	1,8	1,8
OF-500	500 m	3,25	2,25	2,0	2,0
OF-2000	2000 m	8,5	4,5	3,5	3,5
OF-5000	5000 m	-	-	4,0	4,0
OF-10000	10000 m	-	-	6,0	6,0

5.4.2 Cabling of objects

It is required to agree class of channel with GLSA operation services each time.

5.4.3 Types of cables

Fibre optic cables with fibres of parameters given in Specification No 3750 shall be used.

Channels can be accomplished with single-mode fibre cables of OS1 category and multi-mode cables of OM1, OM2, OM3 and OM4 categories. Total length of links shall be calculated in documentation.

5.4.4 Connecting equipment

Mechanical and optical characteristics shall meet requirements of PN-EN 61300 standard. Cables in work area shall be connected to floor cabling sockets with use of duplex SC-D connectors. Connecting equipment according to Specification 3750 shall be used in distribution points.

5.5 Installation of cabling

5.5.1 Principles

If components fulfilling requirements of adequate standards have been used, than it is assumed that requirements for performance of channels are met. So then, for example, use of 5 category cables and equipment ensures class D cabling.

Installation can proceed after acceptance of adaptation works covered by Specification 3720. Installation workmanship shall comply with PN-EN 50174-1, PN-EN 50174-2, PN-EN 50174-3 standards.

5.5.2 Symmetrical horizontal cabling

Physical length of A, B, and C category cables is not critical, yet has to meet requirements of p. 4.2.1.

Physical length of >C class channels shall not exceed 100m, and simultaneously:

- Length of permanent horizontal cable shall not exceed 90 m.
- Length of patchcord cable shall not exceed 20 m, where MUTO sockets for multiple users have been used.
- Length of cross cables shall not exceed 5 m.

It is necessary to check [with use of tester] and present in form of report:

- connection correctness of all cores for breaks and short-circuits [map of connections]
- insulation resistance for all cores in relation to second, earthed core
- loop resistance for all pairs in low-pair cables

- loop resistance for 10% of pairs in multi-pair cables [> 4x2].

For cables of category 5 and higher, additional measurement is required for:

- attenuation of links as function of frequency
- NEXT attenuation between cable pairs

5.5.3 Symmetrical backbone cabling

Length of cables shall result from design. Measurements as in p. 4.4.2 are to be executed for each section of horizontal cabling,

5.5.4 Fibre optic cables

Attenuation of links and modal bandwidth referred to length shall be measured according to PN-EN 60793-1-40 and PN-EN 60793-1-41 standards. Results of measurements shall correspond to values resulting from design – adequate records shall be put into report of measurements.

5.6 Acceptance of cabling

5.6.1 Procedures

Acceptance principles given in Specification 3720 shall be employed. It is necessary to hand-over reports for each section, confirming required parameters for category required by documentation.

5.6.2 Symmetrical cables

5% of randomly selected pairs, detailed in reports, will subject to check. Execution of attenuation and NEXT measurements on acceptance is not required, if standardized lengths [< 90m] of floor cables are maintained.

5.6.3 Fibre optic cables

10% of randomly selected fibres, detailed in reports, will subject to check. Execution of attenuation measurements on acceptance is not required, if parameters of channels given in p. 4.3.1 are maintained basing on results of calculations.

5.7 Documentation

Set of documentations that shall be submitted along with the system in order to perform acceptance and commissioning of the system:

1. Technical description, including:

- description of existing equipment
- description of newly designed equipment
- description of operation principles
- detailed description of system components
- operating, installation and maintenance instructions
- schedule of related standards and other documents

2. Statement of materials

3. List of cables

4. Drawings

- description of graphical symbols

- block diagrams
- layout drawings
- wiring (cabling) diagrams
- single-line power supply diagrams
- layout drawings of panels
- assembly examples

5. As-built documentation, including revised drawings, reflecting changes introduced in relation to equipment and wiring system.
6. Start-up check list.
7. Acceptance report.

6 Relevant documents

Any "Technical Specification" issued by GRUPA LOTOS S.A. listed in Contract Files.

7 Standards and regulations

It is in each case understood that quoted standards, regulations, directives and orders are of their latest editions, along with amendments, annexes and supplements in force.

7.1 Building regulations

The Law of 7 July 1994, Building Law (consolidated text JoL 2010.243.1623)

1 Minister of Infrastructure order of 12 April 2002, on technical conditions that buildings and their location shall comply with (JoL 2002.75.690 as amended).
2 Minister of Infrastructure order of 25 April 2012, on detailed scope and form of building project (JoL 2012.0.462).

The Law of 16 April 2004, on building products

3 Minister of Infrastructure order of 14 October 2004, on European technical approvals and Polish bodies authorized for issuing them (JoL 2004.237.2375).
4 Minister of Infrastructure announcement of 5 July 2004, on specification of mandates granted by European Commission for elaboration of European harmonized standards and guidelines for European technical approvals, along with subject scope of these mandates (M.P. 2004.32.571).
5 Minister of Infrastructure order of 8 November 2004, on technical approvals and organizational bodies authorised for issuing them (JoL 2004.249.2497).

7.2 Polish PN-EN Standards

Standards of **50xxx** section, regarding cables, wires and connectors are listed below. Standards of **6xxxx** section are included in Specification N° 3750.

Item	Standard N^{o}	Standard title
1.	PN-EN 50173 (all parts)	Information technology. Generic cabling systems.
2.	PN-EN 50174-1	Information technology. Cabling installationInstallation specification and quality assurance
3.	PN-EN 50174-2	Information technology. Cabling installationInstallation planning and practices inside buildings.
4.	PN-EN 50174-3	Installation technology. Cabling installationInstallation planning and practices outside buildings.
5.	PN-EN 50288-1	Multi-element metallic cables used in analogue and digital communication and controlGeneric specification
6.	PN-EN 50288-2-1	Multi-element metallic cables used in analogue and digital communication and controlSectional specification for screened cables characterised up to 100 MHz. Horizontal and building backbone cables.
7.	PN-EN 50288-2-2	Multi-element metallic cables used in analogue and digital communication and controlSectional specification for screened cables characterised up to 100 MHz. Work area and patch cord cables
8.	PN-EN 50288-3-1	Multi-element metallic cables used in analogue and digital communication and controlSectional specification for unscreened cables characterised up to 100 MHz. Horizontal and building backbone cables.
9.	PN-EN 50288-3-2	Multi-element metallic cables used in analogue and digital communication and controlSectional specification for unscreened cables characterised up to 100 MHz. Work area and patch cord cables.
10.	PN-EN 50288-4-1	Multi-element metallic cables used in analogue and digital communication and control. Sectional specification for screened cables characterized up to 600 MHzHorizontal and building backbone cables.
11.	PN-EN 50288-4-2	Multi-element metallic cables used in analogue and digital communication and control. Sectional specification for screened cables characterized up to 600 MHzWork area and patch cord cables.
12.	PN-EN 50288-5-1	Multi-element metallic cables used in analogue and digital communication and control. Sectional specification for screened cables characterized up to 250 MHz.
13.	PN-EN 50288-5-2	Multi-element metallic cables used in analogue and digital communication and control. Sectional specification for screened cables characterized up to 250 MHz.
14.	PN-EN 50288-6-1	Multi-element metallic cables used in analogue and digital communication and control. Sectional specification for unscreened cables characterised up to 250 MHz.
15.	PN-EN 50288-6-2	Multi-element metallic cables used in analogue and digital communication and control. Sectional specification for unscreened cables characterised up to 250 MHz.
16.	PN-EN 50288-7	Multi-element metallic cables used in analogue and digital communication and control. Sectional specification for instrumentation and control cables.

17.	PN-EN 50377-2-1	EN-Connectors Sets and Interconnect Components to Be Used in Optical Fibre Communication Systems - Product Specifications Part 2-1: Type FC-PC Terminated on IEC 60793-2 Category B1 Singlemode Fibre.
18.	PN-EN 50377-3-1	EN-Connectors Sets and Interconnect Components to Be Used in Optical Fibre Communication Systems - Product Specifications Part 3-1: Type SG Terminated on IEC 60793-2 Category A1a and A1b Multimode Fibre
19.	PN-EN 50377-5-1	Connectors sets and interconnect components to be used in optical fibre communication systems. Product specifications. Connector sets and interconnect components to be used in optical fibre communication systems. Product specifications. Type EC terminated on IEC 60793-2 category B.1.1 singlemode fibre.
20.	PN-EN 50377-6-1	Connectors sets and interconnect components to be used in optical fibre communication systems. Product specifications.Type SC-RJ terminated on IEC 60793-2 category A1a and A1b multimode fibre.
21.	PN-EN 50377-6-2	EN-Connector sets and interconnect components to be used in optical fibre communication systems Product specifications Part 6-2: Type SC-RJ terminated on IEC 60793-2 category B1.1 singlemode fibre.
22.	PN-EN 50377-7-1	Connector sets and interconnect components to be used in optical fibre communication systems. Product specificationsType LC-PC duplex terminated on IEC 60793-2 category A1a and A1b multimode fibre.
23.	PN-EN 50377-7-2	Connector sets and interconnect components to be used in optical fibre communication systems. Product specificationsLC-PC duplex terminated on IEC 60793-2 category B1.1 singlemode fibre.
24.	PN-EN 50377-7-3	Connector sets and interconnect components to be used in optical fibre communication systems. Product specificationsType LC-APC duplex terminated on IEC 60793-2 category B1.1 singlemode fibre.
25.	PN-EN 50377-7-4	Connector sets and interconnect components to be used in optical fibre communication systems. Product specificationsLC-PC simplex terminated on IEC 60793-2-50 category B1.1 and B1.3 singlemode fibre with full zirconia ferrule for category C.
26.	PN-EN 50377-9-1	Connectors sets and interconnect components to be used in optical fibre communication systems - Product specifications - Type MT-RJ terminated on IEC 60793-2 category A1a and A1b multimode fibre.
27.	PN-EN 50377-9-2	Connector sets and interconnect components to be used in optical fibre communication systems. Product specificationsType MT-RJ terminated on IEC 60793-2 category B1.1 singlemode fibre.
28.	PN-EN 50377-10-1	Connectors sets and interconnect components to be used in optical fibre communication systems. Product specifications.Type MU-PC terminated on IEC 60793-2 category B1.1 singlemode fibre.
29.	PN-EN 50377-10-2	Connectors sets and interconnect components to be used in optical fibre communication systems. Product specificationsMU/APC singlemode terminated on IEC 60793-2 category B1 fibre

7.3 European EN Standards

Standards and projects of standards regarding systems of cabling as well as cables and wires are listed below.

1	EN 50346	Information technology - Cabling installation - Testing of installed cabling

7.4 IEC standards

Sheets of 61156 standards are specified, related to symmetrical cables for generic cabling systems. PN-EN/IEC standards, regarding fibre optic cables and connectors are included in Specification 3750.

1	IEC 61156-1	Multicore and symmetrical pair/quad cables for digital communications - Part 1: Generic specification
2	IEC 61156-1 Corr.1	Corrigendum 1 - Multicore and symmetrical pair/quad cables for digital communications - Part 1: Generic specification
3	IEC 61156-1-1	Multicore and symmetrical pair/quad cables for digital communications - Part 1-1: Capability Approval - Generic specification
4	IEC 61156-2	Multicore and symmetrical pair/quad cables for digital communications - Part 2: Horizontal floor wiring - Sectional specification
5	IEC 61156-2-1	Multicore and symmetrical pair/quad cables for digital communications - Part 2-1: Horizontal floor wiring - Blank detail specification
6	IEC 61156-2-2	Multicore and symmetrical pair/quad cables for digital communications - Part 2-2: Horizontal floor wiring - Capability Approval - Sectional specification
7	IEC 61156-3	Multicore and symmetrical pair/quad cables for digital communications - Part 3: Work area wiring - Sectional specification
8	IEC 61156-3-1	Multicore and symmetrical pair/quad cables for digital communications - Part 3-1: Work area wiring - Blank detail specification
9	IEC 61156-3-2	Multicore and symmetrical pair/quad cables for digital communications - Part 3-2: Work area wiring - Capability Approval - Sectional specification
10	IEC 61156-4	Multicore and symmetrical pair/quad cables for digital communications - Part 4: Riser cables - Sectional specification
11	IEC 61156-4-1	Multicore and symmetrical pair/quad cables for digital communications - Part 4-1: Riser cables - Blank detail specification
12	IEC 61156-4-2	Multicore and symmetrical pair/quad cables for digital communications - Part 4-2: Riser cables - Capability approval - Sectional specification
13	IEC 61156-5	Multicore and symmetrical pair/quad cables for digital communications - Part 5: Symmetrical pair/quad cables with transmission characteristics up to 600 MHz - Horizontal floor wiring - Sectional specification
14	IEC 61156-5-1	Multicore and symmetrical pair/quad cables for digital communications - Part 5-1: Symmetrical pair/quad cables with transmission characteristics up to 600 MHz - Horizontal floor wiring - Blank detail specification
15	IEC 61156-5-2	Multicore and symmetrical pair/quad cables for digital communications - Part 5-2: Symmetrical pair/quad cables with transmission characteristics up to 600 MHz - Horizontal floor wiring - Capability approval - Sectional specification
16	IEC 61156-6	Multicore and symmetrical pair/quad cables for digital communications

		- Part 6: Symmetrical pair/quad cables with transmission characteristics up to 600 MHz - Work area wiring - Sectional specification
17	IEC 61156-6-1	Multicore and symmetrical pair/quad cables for digital communications - Part 6-1: Symmetrical pair/quad cables with transmission characteristics up to 600 MHz - Work area wiring - Blank detail specification
18	IEC 61156-6-2	Multicore and symmetrical pair/quad cables for digital communications - Part 6-2: Symmetrical pair/quad cables with transmission characteristics up to 600 MHz - Work area wiring - Capability approval - Sectional specification

7.5 Other standards

Item	Standard N^{o}	Title of standard
1	ISO/IEC 11801	Information technology – Generic cabling for customer cabling
2	EIA/TIA 568	Commercial building telecommunications wiring
3	pr EN 50167 (1993-11) Final Draft	Section for horizontal floor wiring with a common overall screen for use in digital communication
3	pr EN 50168 (1993-11) Final Draft	Section for work area wiring cables with a common overall screen for use in digital communication
3	pr EN 50169 (1993-11) Final Draft	Section for backbone cables (campus and riser) with a common overall screen for use in digital communication

8 Enclosures

- Enclosure No. 1 View of cabinet

9 Record of changes

Rev.	Date	Description of changes	Introduced by
1	30-11-2013 (rev. 1)	Review, update, standardize and changes to the Standard within scope of order No. OK/990/2012	Editorial board coordinated by T.Wróbel
-	31-08-2015	Page layout corrections, no contents changes.	T. Wróbel

Grupa LOTOS S.A.	**ENCLOSURE No. 1**	Spec. N°
	View of cabinet	3740

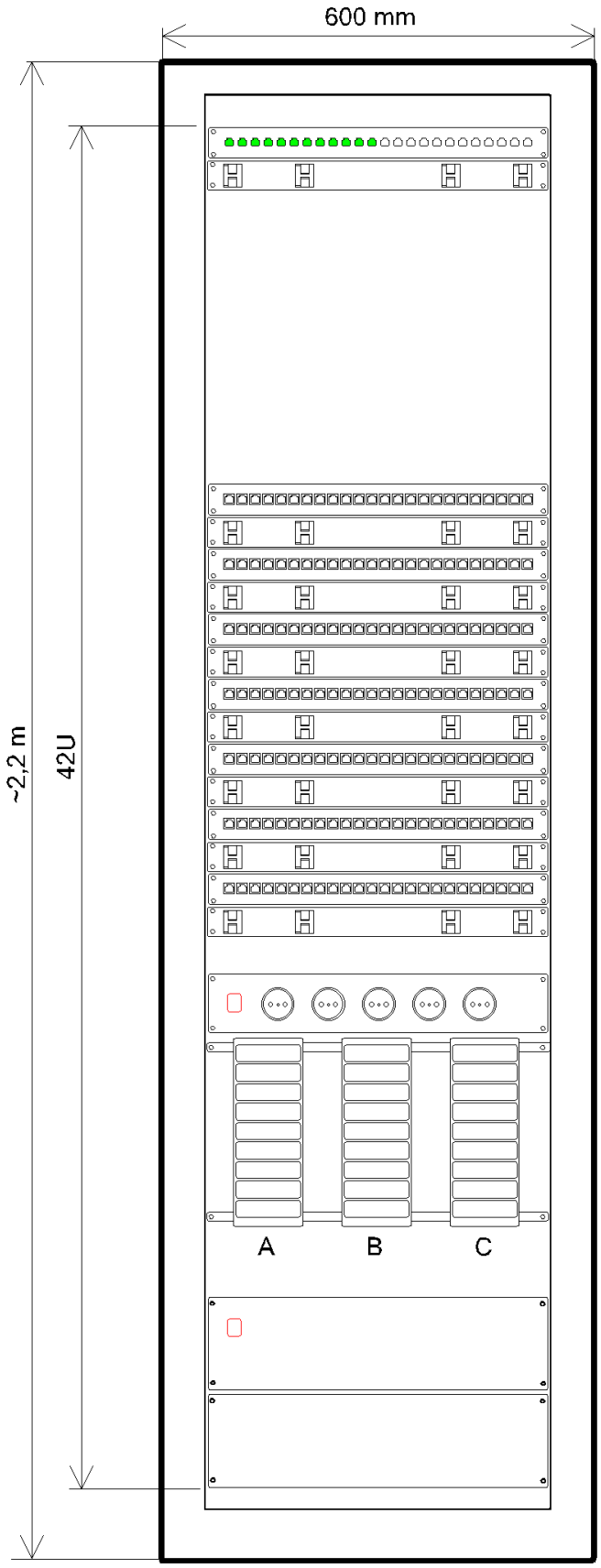

patch - panel:
24 ST MM connectors [12 x G6 from MDF]

reserve for active equipment

panel: 24 sockets RJ45

panel: 24 sockets RJ45

panel: 24 sockets RJ45

panel: 24 sockets RJ45

panel: 24 sockets RJ45

panel: 24 sockets RJ45

panel: 24 sockets RJ45

panel: 5 sockets ~230V

3 KRONE magazines
A - telephone terminal blocks + protectors
B - cross connection blocks from "A"
RJ45 <> LSA 2/2 [2/4]
C - blocks for other telecommunication cables

power unit

battery unit

Arch. No.	Area	Sub-area	Doc. No.	Rev. No.	Issue Date	Page	Pages
19316	**90**	**00**	**PR 99003**	**1**	**30.11.13**	**1**	**1**